Implementation of Digital Cinema Mastering System Supporting Multiple Encoding and Wrapping Servers

Yeonjeong Jeong, Bumho Kim, Dowon Nam, and Kisong Yoon

***Abstract*—Digital Cinema Initiatives, LLC (DCI) has established DCI Digital Cinema System Specification (DCSS) which is intended to promote the widespread deployment of digital cinema. We propose a distributed mastering system of digital cinema. It can simultaneously encode Digital Cinema Distribution Master (DCDM) images into JPEG2000 images on remote servers and produce a Digital Cinema Package (DCP) and Key Delivery Message (KDM) that can be satisfied to DCSS. The distributed mastering system covers the packaging process of DCP for digital cinema content and the generating and issuing process of KDM for the DCP.**

***Index Terms*—Digital cinema, digital cinema mastering.**

I. Introduction

The mastering of Digital Cinema is the process to produce DCP(Digital Cinema Package) from DCDM(Digital Cinema Distribution Master). DCP and DCDM have been defined by Digital Cinema Initiatives, LLC in their recommendations for packaging of Digital Cinema contents [1]. DCDM is the output of the Digital Cinema post-production process and is the image structure, audio structure, subtitle structure. DCP is a collection of digital files used to store and convey Digital Cinema image, audio and subtitle. DCDM is compressed, encrypted, wrapped and packaged to DCP [2]-[7]. KDM has been designed to deliver security parameters. It contains content keys for a specified Composition Play List (CPL), content key parameters – primarily the permitted key usage date/time window, and the Trusted Device List (TDL) which identifies equipment permitted to use the content keys [8]-[14].

We implement a Digital Cinema mastering system that supports multiple remote servers to simultaneously encode image DCDM into JPEG2000 format and wrap it into MXF file. We propose a distributed mastering system that provides the encoding of DCDM image, the composing and packaging of DCP and the generating and issuing of KDM for Digital Cinema. It consists of DCP and Master KDM generating module, JPEG2000 encoding and MXF generating module, and KDM issuing module.

Manuscript received December 15, 2014; revised January 26, 2015. This work was supported by the ICT R&D program of MSIP/IITP. [14-000-02-001, Development of UHD Realistic Broadcasting, Digital Cinema, and Digital Signage Convergence Service Technology].

The authors are with Electronics and Telecommunications Research Institute, 218 Gajeong-ro, Yuseong-gu, Daejeon, Korea (e-mail: yjjeong@etri.re.kr, mots@etri.re.kr, dwnam@etri.re.kr, ksyoon@etri.re.kr).

II. Proposed Mastering Workflow

Digital Cinema content for distribution, DCP, is generated at the mastering time. DCDM is delivered from Digital Cinema post-production. It is compressed, wrapped and packaged into DCP. Fig. 1 shows the workflow of Digital Cinema mastering process of the proposed mastering system. Each step of the workflow is as following.

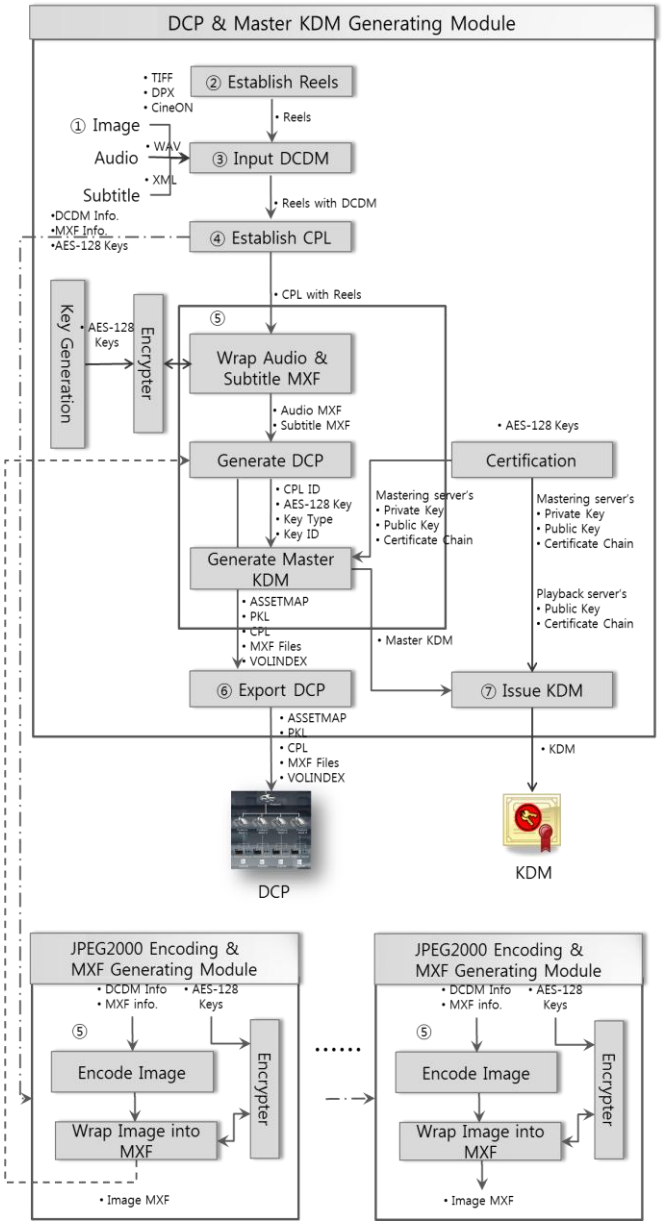

Fig. 1. Proposed mastering workflow.

1) DCDM is delivered in the form of TIFF, DPX, CINEON files for image DCDM, WAV files for audio DCDM and XML files for subtitle DCDM.

- Image DCDM is delivered in the remote server which has the JPEG2000 encoding and MXF generating module

2) Establish reels of DCP. Each reel has an image, audio and subtitle track.
3) Input the sources of each reel which are the file path to an image, audio and subtitle DCDM.
   - The file path of image DCDM includes the address of the remote server and the local file path of image DCDM in the remote server
4) Establish CPL by adding reels.
5) Generate DCP.
   - The each remote server encodes image DCDM which is located in its local storage into JPEG2000 format and wrap it into MXF file which will be generated in the server of DCP and Master KDM generating module.
   - Wrap audio DCDM into MXF file.
   - Wrap subtitle DCDM into MXF file.
   - Generate ASSETMAP, CPL, PKL and VOLINDEX file.
   - Generate Master KDM file.
6) Export DCP to external storage.
7) Issue KDMs for Digital Cinema playback servers

The DCP and Master KDM generating module provides the wrapping of the audio DCDM and subtitle DCDM, and the generating of DCP such as ASSETMAP, CPL, PKL, and VOLINDEX. If MXF file is encrypted, it also generates the Master KDM of DCP. The KDM issuing module issues KDM to a specific Digital Cinema playback server by using the Master KDM. It is combined with The DCP and Master KDM generating module to issue to KDM from Master KDM.

The JPEG2000 encoding and MXF generating module provides the encoding of image DCDM, the wrapping of the encoded image. It is installed on several servers. The each server encodes image DCDM which is located in its local storage into JPEG2000 format and wrap it into MXF file. Fig. 2 shows the system model of The DCP and Master KDM generating module and The JPEG2000 encoding and MXF generating modules.

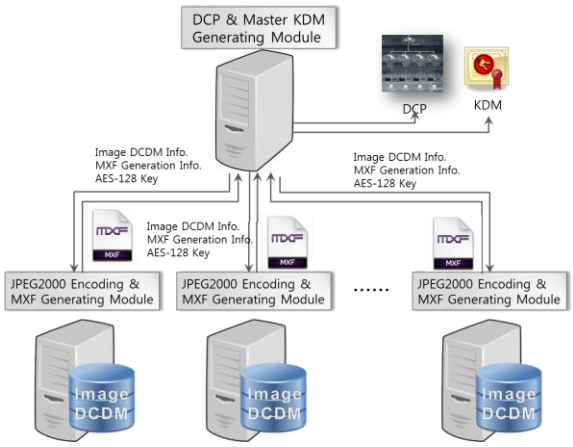

Fig. 2. Proposed mastering system model.

III. Proposed Mastering System

Proposed mastering system defines the entities which involve in generating MXF, DCP, and KDM. It consists of the DCP and Master KDM generating module, the JPEG2000 encoding and MXF generating module, and the KDM issuing module.

A. DCP and Master KDM Generating Module

The DCP and Master KDM generating module provides

It consists of reel management function, DCDM input function, DCP packaging function, DCP export function, and Master KDM generating function.

The reel management function provides reel management such as add reel and delete reel. It uses a reel tree management to handle a set of reels which are used in DCP and has methods to establish the structure of reels. Each of the reels consists of a set of image, audio, and subtitle track file, which have a specific duration between 20 ~ 30 minutes with the same period of time.

The DCDM input function provides a method to DCDM input for image, audio and subtitle of each reel. Image input is the address of remote server and its local path to raw image files such as TIFF, DPX, CineON, J2C and image MXF file. Audio input is the file path to wave files such as front left, front right, center, low frequency, surround left and surround right file, and audio MXF file. Subtitle input is the file path to subtitle XML, and subtitle MXF file.

The DCP packaging function provides how to conceptually compose CPL by using the reels in the reel tree, to package Digital Cinema contents to DCP and to generate Master KDM. After the tree of reels has established and the DCDM inputs of reel has been finished, the sequence of reels will be built into CPL which specifies the sequence of reels and is a playlist for specifying how a composition is played and what track files are required. The structure of CPL contains a set of reels each of which contains image, audio and subtitle track.

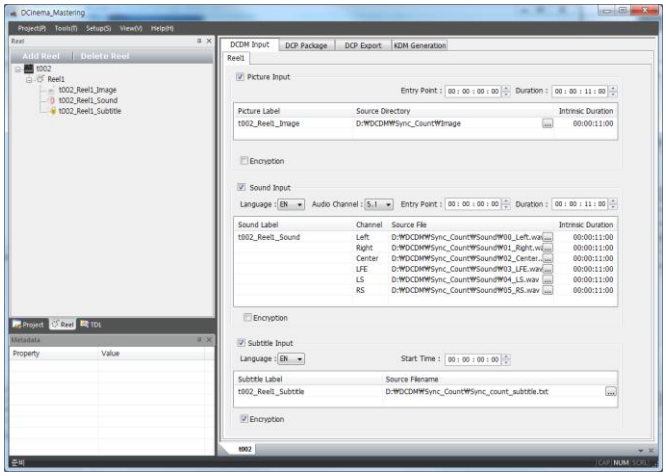

Fig. 3. Proposed DCP and master KDM generating module UI.

For the DCP generation, Firstly, image encoding and MXF file generation occur. The DCP and Master KDM generating module requests the JPEG2000 encoding and MXF generating modules in remote servers to encode DCDM image and generate MXF files. Secondly, audio MXF file generation occurs. From the audio files, we can get the frame data. For example, 5.1 channels consist of 6 WAV files. From the 6 WAV file, we can get the audio frame data which contain Left, Right, Center, LFE, Left Surround, Right Surround that match the frame. Audio frame data are encrypted by using a key from the Key Generation block it is

required. Then, the audio frame data are wrapped into an audio MXF file. Thirdly, subtitle MXF file generation occurs. The subtitle file is encrypted by using a key from the Key Generation block if encryption is needed. The subtitle XML is wrapped into a subtitle MXF file. Fourthly, The DCP packaging function makes the rest components of DCP, such as CPL file, PKL file, ASSETMAP file, and VOLINDEX file with the generated MXF files.

The DCP export function provides the copy of the generated DCP to target storage. It also provides the copy of DCP subset to target storage with linked package of the DCP subset.

Master KDM generating function occurs if any of MXF files is encrypted. To produce KDM to a specific Digital Cinema playback server, the security information which is used to encrypt DCP is needed. We store the information in the form of KDM, called Master KDM. To generate Master KDM, DCP Packaging module gets the AES-128 keys, key ids, and CPL Id when DCP generating. It encrypts the AES-128 keys which are used to encrypt MXF files with mastering system's public key and make a KDM for the mastering system itself.

B. JPEG2000 Encoding and MXF Generating Module

For the DCP generation, Firstly, image MXF file generation occurs. Image files which are the image DCDM input are compressed into JPEG2000 images. Then, the JPEG2000 images are wrapped into an image MXF file. If encryption to the JPEG2000 images is needed, which means KDM is required to DCP, the JPEG2000 images are encrypted by using a key from the Key Generation block before being wrapped into the image MXF file.

1) JPEG2000 encoding block

We use a parallel architecture of the JPEG2000 encoder in hybrid CPU/GPU platform to achieve scalability and a high encoding speed. To process the high workload of JPEG2000 encoding for large-scale video data, we develop the implementation of parallel encoder using multi-core CPU and multi GPUs. The JPEG2000 encoding block consists of several steps that are performed in consecutive order.

The first encoding step is component transform which converts the multiple color components data into another color representation. The component transform removes the inter-component redundancy that could be found in the image.

The next step is DWT which is a domain transform that transforms an image from special domain to frequency domain. This enables an intra-component special decorrelation that concentrates the image information in a small localized area. DWT can be performed by the lifting scheme based filter which has lower computational complexity and reduced memory compared to the former filter.

Once DWT is applied, all the resulting wavelet information is quantized, which means that wavelet coefficients are reduced in precision. The transformed coefficients are quantized using uniform scalar dead-zone quantization. The process of quantization introduces reduction of the data precision in order to achieve compression.

The encoding processes up to quantization are performed in multiple GPUs. In order to obtain high efficiency, the each component could be processed independently on separate GPUs. The first work flow is to copy image data from CPU RAM to global memory of GPU. Once image data is ready in global memory, the encoding process from color transform to quantization can be executed on GPUs.

After quantization, the integer wavelet coefficients still contain a lot of spatial redundancy. This redundancy is removed by context-based entropy coding (EBCOT) Tier-1 so the data is efficiently compressed into a minimum size bit-stream. The process of entropy coding is highly sequential and difficult to parallelize efficiently using many threads in GPU. Therefore, EBCOT step is performed in CPU. Each of these code-blocks is entropy coded separately, which gives potential for parallelization in multi-core CPU.

The last step in encoding process is EBCOT Tier-2. This process is creating and ordering the packets for rate allocation. This basically consists of writing JPEG2000 bit-stream and creating the progression order. At the end of the computations all the data have to be saved on the CPU memory.

2) MXF generating block

After the DCDM images are compressed into JPEG2000 images, the JPEG2000 images are wrapped into an image MXF file. If encryption to the JPEG2000 images is needed, which means KDM is required to DCP, the JPEG2000 images are encrypted by using a key from the Key Generation block before being wrapped into the image MXF file. The each server of JPEG2000 encoding and MXF generating module encodes image DCDM which is located in its local storage into JPEG2000 format and wrap it into MXF file which will be generated in the server of DCP and Master KDM generating module.

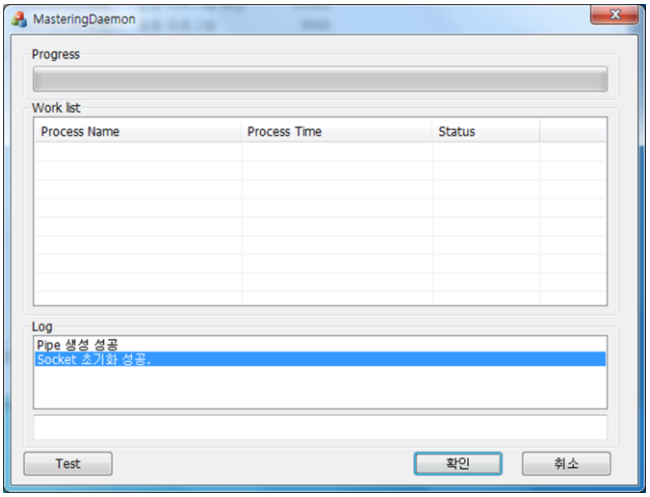

Fig. 4. Proposed JPEG2000 encoding and MXF generating module UI.

C. KDM Issuing Module

We design that mastering system can issue KDM to a specific Digital Cinema playback server by using Master KDM which is generated from DCP packaging process.

Since Master KDM is encrypted by using mastering system's public key, it can be only decrypted with master system's private key. After decrypting Master KDM, it is possible to issue KDM for a specific Digital Cinema playback server. KDM will be encrypted with a specific Digital Cinema

playback server's public key.

If a request to issue a specific KDM for a Digital Cinema playback server occurs, KDM Issuing module will select Digital Cinema playback server's public key which is already registered in TDL and rights usage. KDM Issuing module decrypts cipher data in Master KDM with its private key. It replaces the usage rights with the requested usage rights for the Digital Cinema playback server, encrypts the cipher data with the Digital Cinema playback server's public key, and digitally signs KDM with its private key.

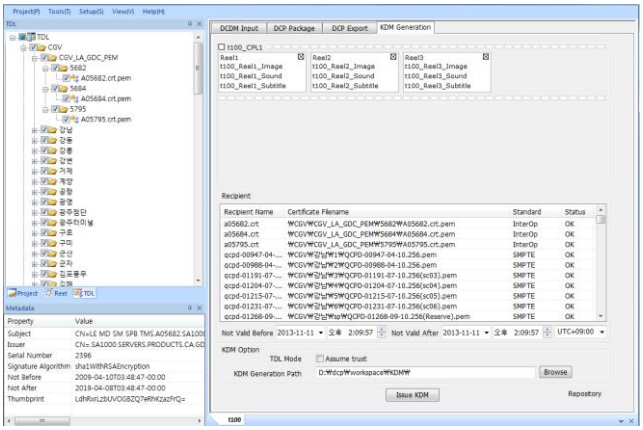

Fig. 5. Proposed JPEG2000 encoding and MXF generating module UI.

IV. Conclusion

Digital Cinema Initiatives released a set of technical specifications and requirements for the mastering of, distribution of, and theatrical playback of Digital Cinema content. DCP has been designed to deliver Digital Cinema content. It contains image, audio, and subtitle essences. And, KDM has been designed to deliver security parameters and usage rights between Digital Cinema content processing centers.

We propose a distributed mastering system that covers the packaging process of DCP with multiple encoding and wrapping DCDM into MXF on remote servers and the generating and issuing process of KDM for Digital Cinema. The proposed system can simultaneously encode DCDM images into JPEG2000 images on remote servers and produce a DCP and KDM. It provides a scheme how DCDM is conceptually organized into reel and CPL structure and how DCP is generated in the distributed mastering system that supports multiple encoding and wrapping servers. And it also provides how KDM is generated and issued from mastering system to Digital Cinema playback server.

References

[1] *Digital Cinema System Specification V1.2*, Digital Cinema Initiatives, L., 2008.

[2] *D-Cinema Packaging — Sound and Picture Track File*, SMPTE 429-3-2007.

[3] *D-Cinema Packaging — MXF Track File Essence Encryption*, SMPTE 429-6-2007.

[4] *D-Cinema Packaging — Composition Playlist*, SMPTE 429-7-2006.

[5] *D-Cinema Packaging — Packing List*, SMPTE 429-8-2007.

[6] Z. Wang, L. Li, X. Wang, K. Zhang, K. Wang, P. Yao, W. Cao, and H. Shen, "A digital cinema Playback system compliant with the DCI specification," *Picture Coding Symposium*, 2009, pp. 1-4.

[7] P. Micanti, F. Frescura, and G. Baruffa, "Digital cinema package transmission over wireless IP networks," *International Symposium on Wireless Communication Systems*, 2008, pp. 154-158.

[8] *D-Cinema Operations — Key Delivery Message*, SMPTE 430-1-2006.

[9] *D-Cinema Operations — Digital Certificate*, SMPTE 430-2-2006.

[10] *D-Cinema Operations — Generic Extra Theater Message Format*, SMPTE 430-3-2006.

[11] H. Zhaoting, G. Qiang, and L. Yiguang, "A digital right management system based on smart card for digital cinema," *Third International Conference on Communications and Networking*, 2008, pp.829-833.

[12] J. A. Bloom, "Security and rights management in digital cinema," *International Conference on Acoustics, Speech, and Signal Processing*, 2003, vol. 4, pp. 712-715.

[13] J. A. Bloom, "Digital cinema content security and the DCI," in *Proc. 40th Annual Conference on Information Sciences and Systems*, 2006, pp. 1176-1181.

[14] Y. Jeong, J. Lee, and K. Yoon, "Implementation of KDM system based on DCI," in *Proc. International Conference on Advanced Communication Technology*, 2011, pp. 690-694.

Yeonjeong Jeong received the BS and MS degrees in computer science from Pusan National University, Pusan, Korea in 1994 and 1996, respectively, and the PhD degree in computer science from Chungnam National University, Daejeon, Korea in 2005. Since 1996, he has worked as a principal researcher in the Creative Content Research Lab. at ETRI, where he has been engaged in government-funded projects, such as DRM-based digital contents distribution solution, technology of contents protection for contents distribution based on multi-platform, and so on. He is now involved in the development project of High Compression, Low Loss Content Creation/Distribution/Display Technology Development for 8K-Video Service.

Bumho Kim received the BS degree in computer science from Sogang University in 2000 and MS degree in information technology from Information Communication University in 2002, respectively. Currently, he is a senior researcher in the Creative Content Research Lab. at ETRI, Daejeon, Korea. His research interests include multimedia, video codec, digital cinema, and digital contents distribution.

Dowon Nam received the B.S. degree in computer science from KAIST, Daejeon, Korea, in 1996 and M.S. degree in information and communication from POSTECH, Pohang, Korea, in 1998, respectively. Currently, he is a senior researcher in the Creative Content Research Lab. at ETRI, Daejeon, Korea. His research interests include multimedia, video codec, digital cinema, and digital contents distribution.

Kisong Yoon received his M.S. and Ph.D degrees in Computer Science from New York City University in 1988 and 1993 respectively. From 1993, he was a principal member of Electronics and Telecommunications Research Institute (ETRI). His research interests are digital contents distribution, digital rights management and digital cinema/signage.